Accelerometer and Gyro for Mobile Equipments

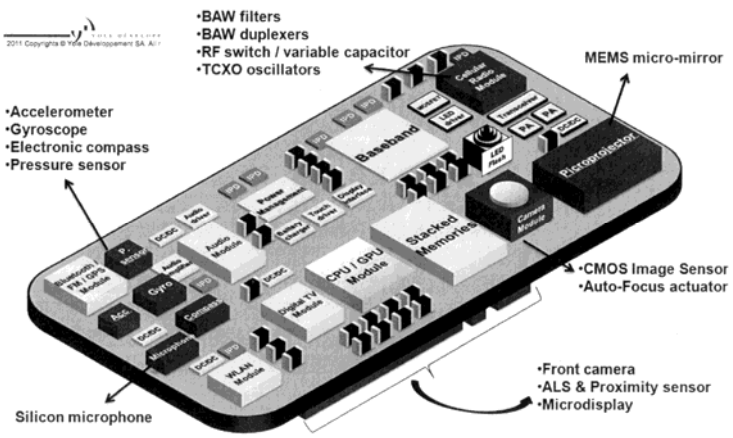

MEMS in mobile equipments (Yole Development)

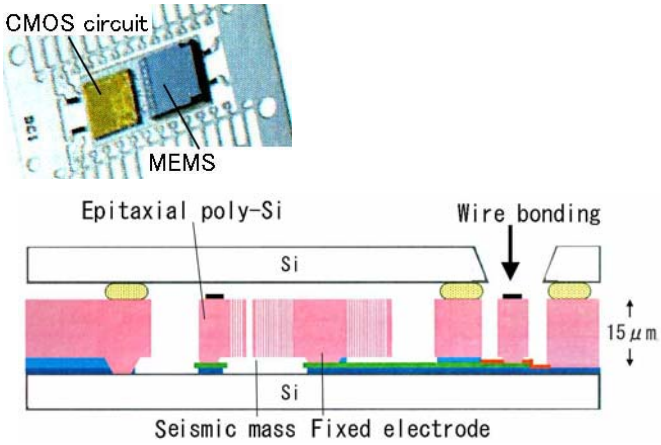

Accelerometer of STMicroelectronics

Reference : H.Noguchi, Latest Developments on MEMS Inertial Sensors and Its Applications, SEMI Technology Symposium 2008, Makuhari, p.45 (2008)

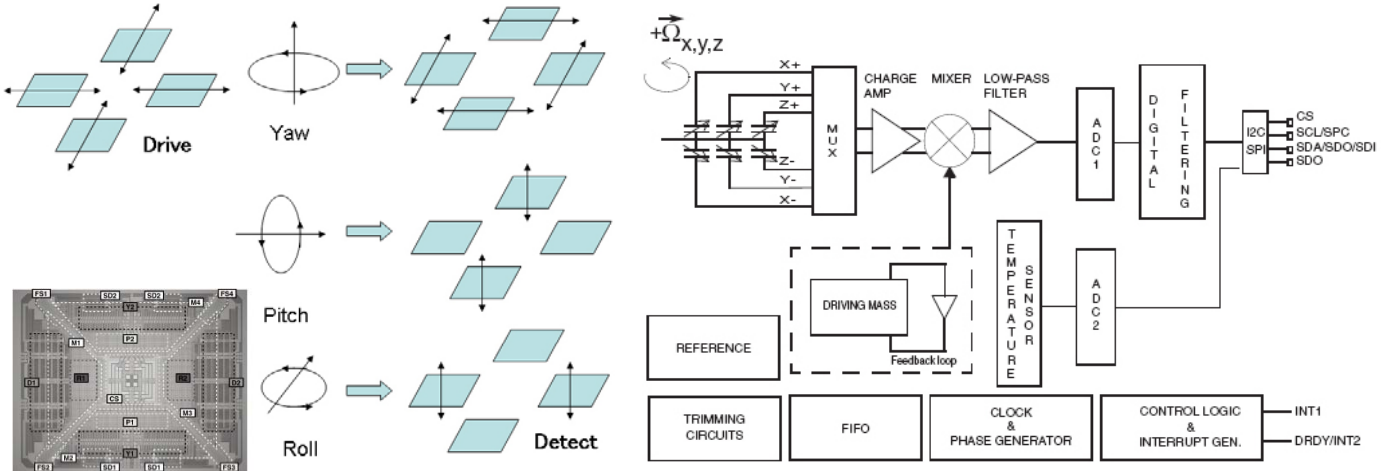

3 axis gyro of STMicroelectronics (L3G4200D)

Reference : L.Prandi, C.Caminada, L.Coronato, G.Cazzaniga, F.Biganzoli, R.Antonello and R.Oboe, A Low-power 2-axis Digital-output MEMS Gyroscope with Single Drive and Multiplexed Angular Rate Readout, ISSCC 2011. (2011) pp.104-105

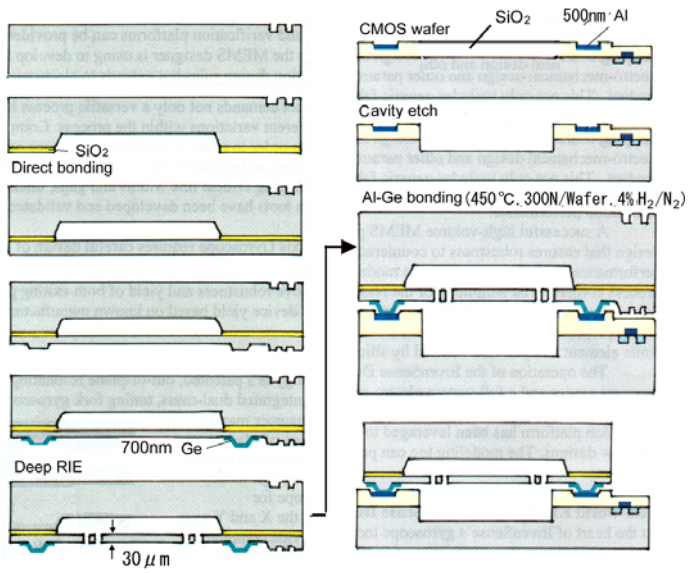

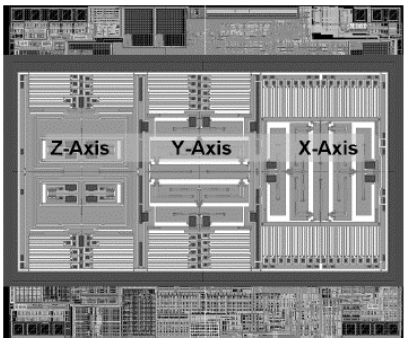

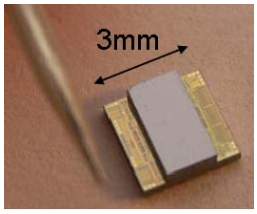

Gyro of Invensense

Reference : J.Seeger, M.Lim and S.Nasiri, Development of High-performance, High-volume Consumer MEMS Gyroscopes, Solid-State Sensors, Actuators and Microsystems Workshop, (2010), pp.61-64